(.45AUTO) MC1911C EXPLODED DRAWING

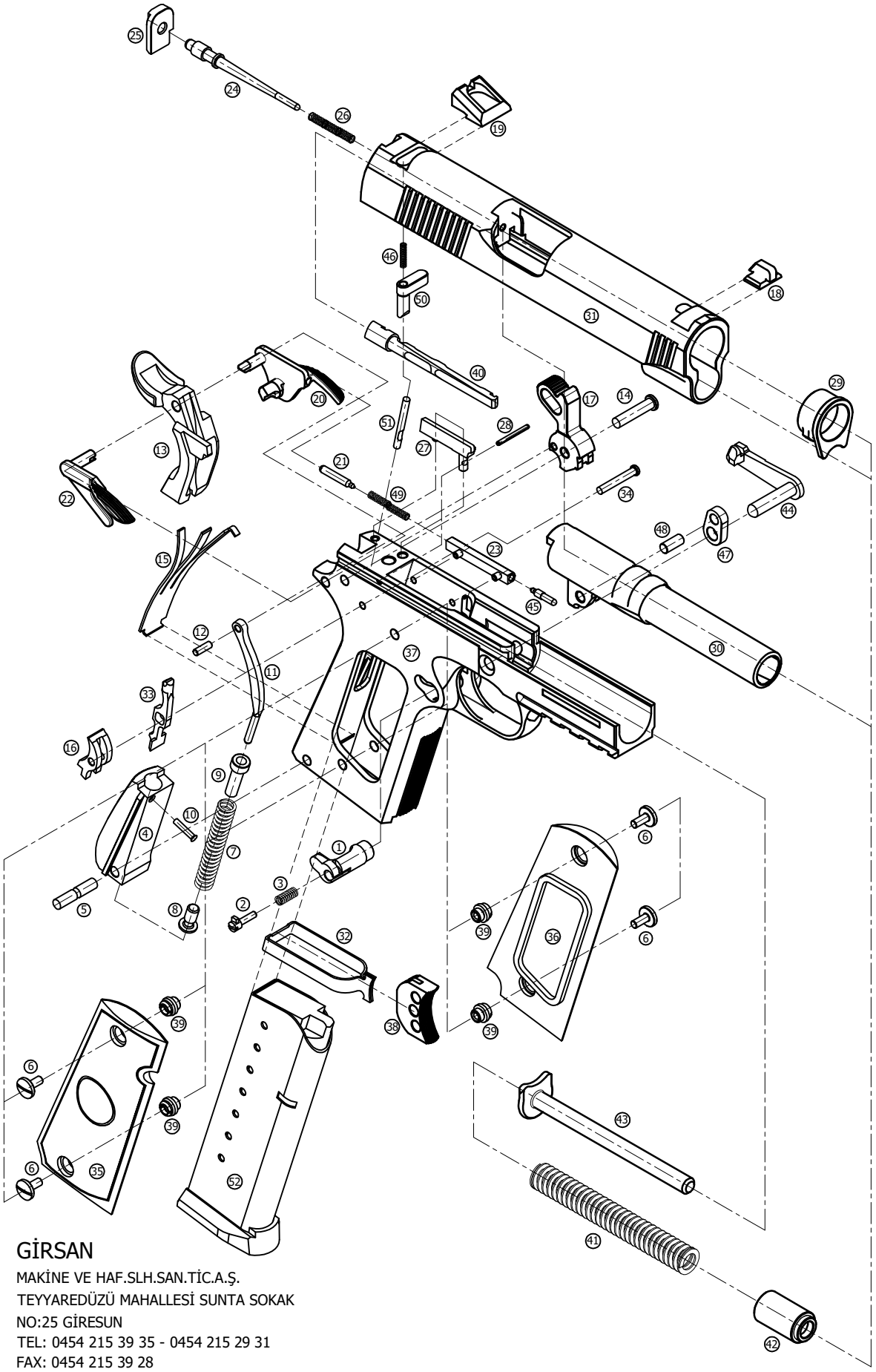

1) Y1911000100: MAGAZINE RELEASE
2) Y1911010100: MAGAZINE CATCH LOCK
3) Y1911010300: MAGAZINE RELEASE SPRING
4) Y1911000200: GRIP INSERT
5) Y1911020100: GRIP INSERT FIXING PIN
6) YC911000300: GRIP SCREW
7) Y1911000400: HAMMER STRUT SPRING
8) Y1911040100: GRIP INSERT PIN RETAINER
9) Y1911040200: GRIP INSERT CAP
10) Y1911040300: GRIP INSERT CAP PIN
11) Y1911000500: HAMMER STRUT
12) Y1911050400: HAMMER STRUT PIN
13) Y1911000600: GRIP SAFETY
14) Y1911000700: HAMMER PIN
15) Y1911000800: SEAR SPRING
16) Y1911001000: SEAR
17) Y1911001100: HAMMER
18) Y911S001500: FORE SIGHT
19) Y11C9001600: REAR SIGHT
20) Y911S001800: SAFETY LEVER
21) Y1911180100: SAFETY LEVER PLUNGER
22) Y911S180200: RIGHT SAFETY LEVER
23) Y1911019B00: PLUNGER TUBE
24) Y1911002100: FIRING PIN
25) Y1911210100: FIRING PIN STOP
26) Y1911002200: FIRING PIN SPRING
27) Y1911002400: CARTRIDGE LAUNCHER
28) Y1911240100: CARTRIDGE LAUNCHER FIXING PIN
29) Y911C002500: BARREL BUSHING
30) Y911C003100: BARREL
31) Y911C003200: SLIDE
32) Y1911003300: TRIGGER BAR
33) Y1911034B00: DISCONNECTOR
34) Y1911340100: SEAR PIN
35) Y1911035A00: A RIGHT GRIP PANEL
36) Y1911035B00: B LEFT GRIP PANEL
37) Y911S004000: FRAME
38) Y911S004200: TRIGGER
39) Y1911004300: GRIP SCREW BUSHINGS
40) Y1911004700: EXTRACTOR
41) Y911C005000: RECOIL SPRING
42) Y911C500100: RECOIL SPRING PLUG
43) Y911C005500: RECOIL SPRING GUIDE
44) Y911C056B00: SLIDE STOP
45) Y1911560100: SLIDE STOP PLUNGER
46) Y0001620100: DISASSEMBLY LATCH RELEASE BUTTON FIXING PIN SPRING
47) Y1911006300: BARREL LOCKING BLOCK
48) Y1911630100: BARREL LOCKING BLOCK FIXING PIN
49) Y1911006600: PLUNGER SPRING
50) Y1911006700: PIN SAFETY BLOCK
51) Y1911670100: PIN SAFETY BLOCK PLUNGER
52) Y1911050300: MAGAZINE

GİRSAN

MAKİNE VE HAF.SLH.SAN.TİC.A.Ş.
TEYYAREDÜZÜ MAHALLESİ SUNTA SOKAK
NO:25 GİRESUN
TEL: 0454 215 39 35 - 0454 215 29 31
FAX: 0454 215 39 28
http://www.girsan.com
e-posta: girsan@girsan.com